UNIVERSITY OF CAMBRIDGE INTERNATIONAL EXAMINATIONS
General Certificate of Education Advanced Level

CANDIDATE NAME

CENTRE NUMBER

CANDIDATE NUMBER

8651223243

PHYSICS **9702/52**

Paper 5 Planning, Analysis and Evaluation **October/November 2012**

1 hour 15 minutes

Candidates answer on the Question Paper.

No Additional Materials are required.

READ THESE INSTRUCTIONS FIRST

Write your Centre number, candidate number and name on all the work you hand in.
Write in dark blue or black pen.
You may use a soft pencil for any diagrams, graphs or rough working.
Do not use staples, paper clips, highlighters, glue or correction fluid.
DO **NOT** WRITE IN ANY BARCODES.

Answer **all** questions.
You may lose marks if you do not show your working or if you do not use appropriate units.

At the end of the examination, fasten all your work securely together.
The number of marks is given in brackets [ ] at the end of each question or part question.

For Examiner's Use	
1	
2	
Total	

This document consists of **8** printed pages.

DC (SJF/SW) 63239
© UCLES 2012

1 As a bar magnet is dropped through a coil, an e.m.f. is induced in the coil. The maximum e.m.f. E is induced as the magnet leaves the coil with speed v.

For Examiner's Use

It is suggested that E is directly proportional to v.

Design a laboratory experiment to test the relationship between E and v. You should draw a diagram, on page 3, showing the arrangement of your equipment. In your account you should pay particular attention to

(a) the procedure to be followed,

(b) the measurements to be taken,

(c) the control of variables,

(d) the analysis of the data,

(e) the safety precautions to be taken.

[15]

© UCLES 2012

Diagram

For Examiner's Use

.....

.....

.....

.....

.....

.....

.....

.....

.....

.....

.....

.....

.....

.....

For Examiner's Use

For Examiner's Use	Defining the problem	Methods of data collection	Method of analysis	Safety considerations	Additional detail

2 Different light-emitting diodes (LEDs) can emit electromagnetic radiation of different wavelengths.

For Examiner's Use

A student uses the circuit of Fig. 2.1 to investigate the minimum potential difference required to cause an LED to emit its characteristic wavelength.

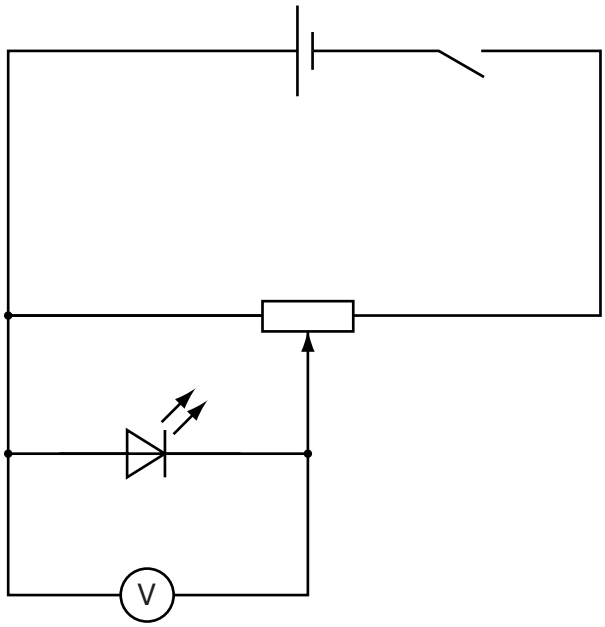

Fig. 2.1

For different LEDs emitting radiation of wavelength λ, the minimum potential difference V is recorded.

Question 2 continues on the next page.

For Examiner's Use

It is suggested that V and λ are related by the equation

$$\frac{hc}{\lambda} = B + eV$$

where c is the speed of light in a vacuum, e is the elementary charge, h is the Planck constant and B is a constant.

(a) A graph is plotted of V on the y-axis against $1/\lambda$ on the x-axis. Determine expressions for the gradient and y-intercept in terms of B, c, e and h.

gradient = ...

y-intercept = ...

[1]

(b) Values of λ and V are given in Fig. 2.2.

$\lambda / 10^{-9}$ m	V/V	
950	0.60 ± 0.05	
875	0.70 ± 0.05	
655	1.20 ± 0.05	
560	1.55 ± 0.05	
505	1.80 ± 0.05	
430	2.25 ± 0.05	

Fig. 2.2

Calculate and record values of $(1/\lambda)/10^6\,\text{m}^{-1}$ in Fig. 2.2. [2]

(c) **(i)** Plot a graph of V/V against $(1/\lambda)/10^6\,\text{m}^{-1}$. Include error bars for V. [2]

(ii) Draw the straight line of best fit and a worst acceptable straight line on your graph. Both lines should be clearly labelled. [2]

(iii) Determine the gradient of the line of best fit. Include the uncertainty in your answer.

gradient = ... [2]

© UCLES 2012

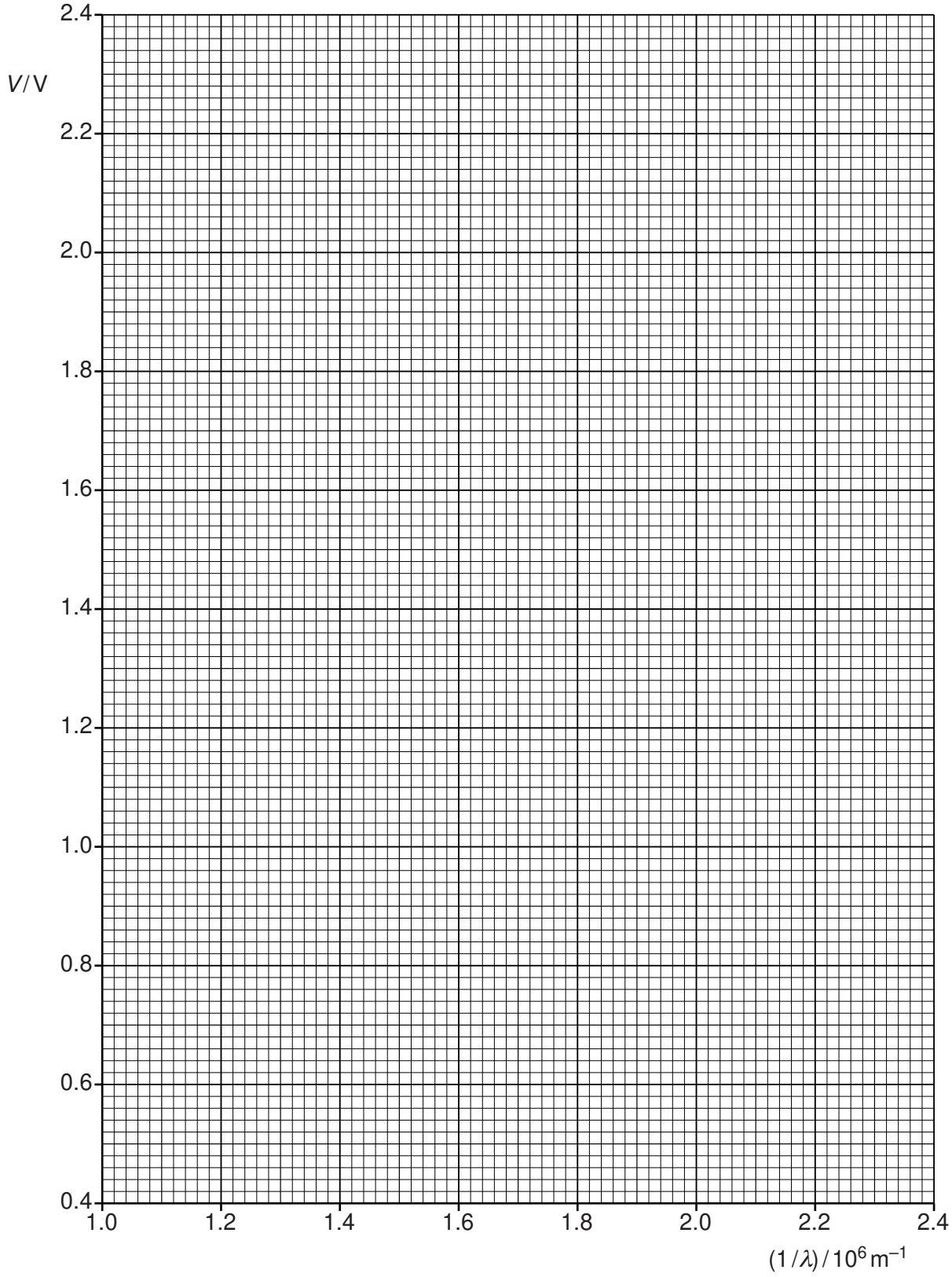

For Examiner's Use

(iv) Determine the *y*-intercept of the line of best fit. Include the uncertainty in your answer.

For Examiner's Use

y-intercept = ... [2]

(d) (i) Using your answer to **(c)(iii)**, determine a value for *h*.

Data: $c = 3.0 \times 10^8\,\text{m s}^{-1}$ and $e = 1.6 \times 10^{-19}\,\text{C}$.

h = ... J s [1]

(ii) Determine the percentage uncertainty in your value of *h*.

percentage uncertainty = ... % [1]

(e) Using your answer to **(c)(iv)**, determine a value for *B*. Include an appropriate unit and the absolute uncertainty in your answer.

B = ... [2]

Permission to reproduce items where third-party owned material protected by copyright is included has been sought and cleared where possible. Every reasonable effort has been made by the publisher (UCLES) to trace copyright holders, but if any items requiring clearance have unwittingly been included, the publisher will be pleased to make amends at the earliest possible opportunity.

University of Cambridge International Examinations is part of the Cambridge Assessment Group. Cambridge Assessment is the brand name of University of Cambridge Local Examinations Syndicate (UCLES), which is itself a department of the University of Cambridge.

© UCLES 2012